SATELLINE®-M3-R3
RADIO RECEIVER MODULE

USER GUIDE

Version 1.2

WIRELESS WORLD – LOCAL SOLUTION

IMPORTANT NOTICE

SATEL reserves the right to change the technical specifications or functions of its products, or to discontinue the manufacture of any of its products or to discontinue the support of any of its products, without any written announcement and urges its customers to ensure, that the information at their disposal is valid.

SATEL softwares and programs are delivered "as is". The manufacturer does not grant any kind of warranty including guarantees on suitability and applicability to a certain application. Under no circumstances is the manufacturer or the developer of a program responsible for any possible damages caused by the use of a program. The names of the programs as well as all copyrights relating to the programs are the sole property of SATEL. Any transfer, licensing to a third party, leasing, renting, transportation, copying, editing, translating, modifying into another programming language or reverse engineering for any intent is forbidden without the written consent of SATEL.

SATEL PRODUCTS HAVE NOT BEEN DESIGNED, INTENDED NOR INSPECTED TO BE USED IN ANY LIFE SUPPORT RELATED DEVICE OR SYSTEM RELATED FUNCTION NOR AS A PART OF ANY OTHER CRITICAL SYSTEM AND ARE GRANTED NO FUNCTIONAL WARRANTY IF THEY ARE USED IN ANY OF THE APPLICATIONS MENTIONED.

Salo, FINLAND 2012

RESTRICTIONS ON USE

SATELLINE-M3-R3 radio modem module has been designed to operate on frequency ranges, the exact use of which differs from one region and/or country to another. The user of a radio modem must take care that the said device is not operated without the permission of the local authorities on frequencies other than those specifically reserved and intended for use without a specific permit.

SATELLINE-M3-R3 is allowed to be use in the following countries, either on licence free channels or on channels where the operation requires a licence. More detailed information is available at the local frequency management authority.

Countries: AT, BE, BG, CA, CH, CY, CZ, DE, DK, EE, ES, FI, FR, GB, GR, HU, IE, IS, IT, LT, LU, LV, MT, NL, NO, PL, PT, RU, RO, SE, SI, SK, US

WARNING! Users of SATELLINE-M3-R3 radio modem modules in North America should be aware, that due to the allocation of the frequency band 406.0 – 406.1 MHz for government use only, the use of radio modem on this frequency band without a proper permit is strictly forbidden.

PRODUCT CONFORMITY

Hereby, SATEL Oy declares that SATELLINE-M3-R3 radio modem module is in compliance with the essential requirements (radio performance, electromagnetic compatibility and electrical safety) and other relevant provisions of Directive 1999/5/EC. Therefore the equipment is labelled with the following CE-marking. The notification sign informs user that the operating frequency range of the device is not harmonised throughout the market area, and the local spectrum authority should be contacted before the usage of the radio modem.

CE1987

DECLARATION of CONFORMITY

In Accordance with
1999/5/EC Directive

of the European Parliament and of the Council of 9 March 1999 on radio equipment and telecommunications terminal equipment and the mutual recognition of their conformity

Doc No: SATEL-DC-RTTE-095
Manufacturer: SATEL Oy
Address: POB 142, (Meriniitynkatu 17), 24101 Salo, Finland

Products :	*Type*	*Model*
	SATEL-TA22	**SATELLINE-M3-R3**

We, the manufacturer of the above mentioned products, hereby declare that these products conform to the essential requirements of the European Union directive 1999/5/EC. This Declaration of Conformity is based on the following documents:

Doc. No	*Type of Product*	*Test Specification*	*Laboratory / Date of Issue*
201610B	SATELLINE-M3-R3	EN 300 113-1 V.1.6.2	NEMKO / Espoo 02.03.2012
201610B	SATELLINE-M3-R3	EN 301 489-1 V.1.9.2, -5 V.1.3.1	NEMKO / Espoo 02.03.2012
201610C	SATELLINE-M3-R3	EN 60950-1:2005 (2nd Ed)	NEMKO / Espoo 04.05.2012

Salo on the 1st of June, 2012

SATEL OY

Pekka Aura
CEO

LOCAL AREA WIRELESS SOLUTIONS • SATEL OY •

SATEL Oy
P.O Box 142, FI-24101 SALO, FINLAND
Street: Meriniitynkatu 17, FI-24100 SALO, FINLAND
Tel. +358 2 777 7800, Fax +358 2 777 7810
E-mail: info@satel.com, www.satel.com

SATEL®
WIRELESS WORLD – LOCAL SOLUTION

WARRANTY AND SAFETY INSTRUCTIONS

Read these safety instructions carefully before using the product:

-Warranty will be void, if the product is used in any way that is in contradiction with the instructions given in this manual, or if the radio modem housing has been opened or tampered with.

-The radio modem module is only to be operated at frequencies allocated by local authorities, and without exceeding the given maximum allowed output power ratings. SATEL and its distributors are not responsible, if any products manufactured by it are used in unlawful ways.

-The devices mentioned in this manual are to be used only according to the instructions described in this manual. Faultless and safe operation of the devices can be guaranteed only if the transport, storage, operation and handling of the devices is appropriate. This also applies to the maintenance of the products.

-To prevent damage both the radio modem module and any terminal devices must always be switched OFF before connecting or disconnecting the serial connection cable. It should be ascertained that different devices used have the same ground potential. Before connecting any power cables the output voltage of the power supply should be checked.

TABLE OF CONTENTS

1. INTRODUCTION

SATEL OY is a Finnish electronics and Telecommunications Company specialising in the design and manufacture of wireless data communication products. SATEL designs, manufactures and sells radio modems intended for use in applications ranging from data transfer to alarm relay systems. End users of SATEL products include both public organisations and private individuals.

SATEL OY is the leading European manufacturer of radio modems. SATEL radio modems have been certified in most European countries and also in many non-European countries.

This document is datasheet for the SATELLINE-M3-R3 receiver module. It is intended to describe how to use the module and how to integrate it into a host device.

1.1 Terms and abbreviations

Abbreviation	Description
CTS	Clear To Send, handshaking signal used in asynchronous communication.
DTE	Data Terminal Equipment (typically computer, terminal…)
ESD	Electrostatic discharge
RD	Receive Data
RTS	Ready To Send, handshaking signal used in asynchronous communication.
RAM	Random Access Memory

1.2 Description of the product

The SATELLINE-M3-R3 is a UHF receiver module, which receives data from UHF transmissions made by SATELLINE-3AS family and similar transmitters.
The module is designed to be as compact and power efficient as possible. It has been developed especially suitable for integration into battery powered and space constrained host applications benefiting from UHF communications.

The module receives data from the Air interface (Ant. Connector, RF), demodulates and decodes the data and sends the data payload to the DTE port.

The DTE interface is used to provide power to the module and communicate with the module.

1.3 DTE connector

DTE connector is 20-pin pass-through connector. This connector allows the pin to enter the connector from the bottom side and protrude thru the module PCB to the top side, allowing flexible mounting heights with various pin lengths.

Entry from bottom of device, see picture below.

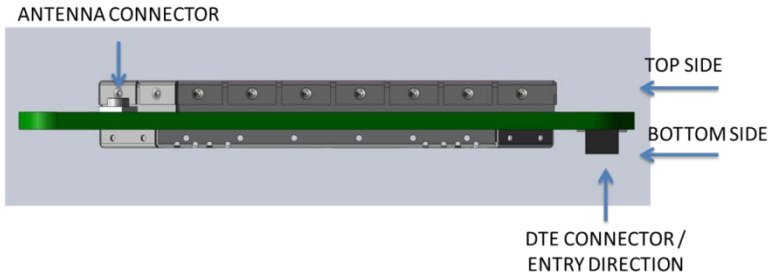

Side view of the module with 1.27mm pitch connector and screw fixing.

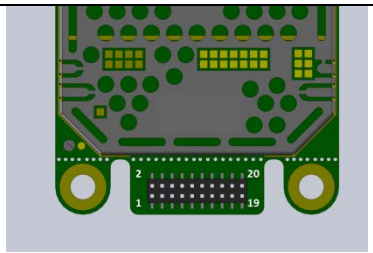

Pin numbering of 1.27 mm pitch DTE connector. View from bottom side of unit

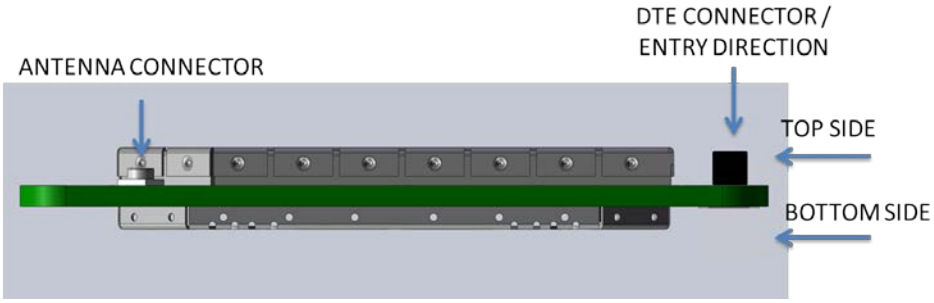

Side view of the module with 1.27mm pitch connector and screw fixing.

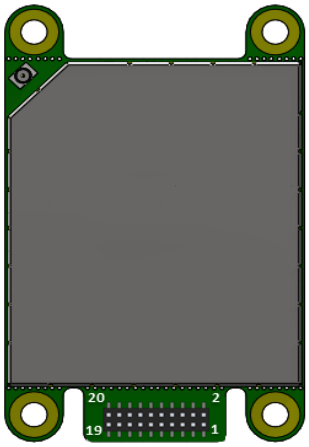

Pin numbering of 1.27 mm pitch DTE connector. View from top side of unit

1.4 Pin order of the DTE connector

Direction IN is data from DTE (Data Terminal Equipment) to the radio modem.
Direction OUT is data from the radio modem to the DTE.

Pin No.	Signal name	Type/Direction	Description
1,2	VCC_IN	POWER/IN	4.0V DC input
3,4	GND	GND/-	Ground reference for power and signals
5	VCC_IO	POWER/IN	EXTERNAL Voltage= 1.8V….3.3V IO POWER. "1" LEVEL FOR CMOS IO INTERNAL Voltage= not connected
6	ENA_MOD	IO/IN	>1,2V= Modem power is ON, <0.2V= Modem power is OFF
7	RD1	CMOS/OUT	Port 1 - Receive data. Data received by module is output on this pin.
8	CTS1	CMOS/OUT	Port 1 - Clear To Send. Modem signals when it is ready to receive data.
9	TD1	CMOS/IN	Port 1 - Transmit Data. Data from DTE to module shall be sent on this pin.
10	RTS1	CMOS/IN	Port 1 - Ready to send. DTE can use this pin to signal when it is ready to receive data from module.
11	RD2	CMOS/OUT	Option for second serial port, not implemented
12	CTS2	CMOS/OUT	
13	TD2	CMOS/IN	
14	RTS2	CMOS/IN	
15	STAT	CMOS/OUT	Status signal. "1" when device is OK and working normally. Various toggle sequences for other state indications. See separate section of manual. Can drive LED directly.
16	GPIO9	CMOS/BIDIR	GPIO – not used
17	$\overline{\text{SERVICE}}$	IN	Input for service access. Internally pulled high.

			Pull low / drive low to set UART1 (RD1,TD1) into known state. See separate section of manual.
18	GPIO11	CMOS/BIDIR	GPIO – not used
19	PPS	CMOS/IN	Pulse per second input. A CMOS input for pulse per second signal output from GPS receivers. Intended to sync time and frequency of receiver to other radios.
20	REF_FREQ_IN	CMOS/IN	Frequency input. A 1MHz…20 MHz input. Generally from a GPS receiver clock. Used for reference frequency synchronization.

2 MECHANICAL CONSIDERATIONS

2.1 Fixing device to host

The radio module can be mounted on to the host by using spacers and screws. Max. screw diameter is 3mm.

2.2 Sheet-metal standoff

In space constrained applications, where there is no room for using screw for fixing, the device can be soldered on to the host board by using metal clips which are part of the bottom shielding of the device. To accommodate for variation in stacking height and host board thickness, there are two standoffs lengths available.
The user must cut the bridge between the desired standoff and shielding screen with a plier, and then bend up the standoff 90° to prepare the standoff for use.

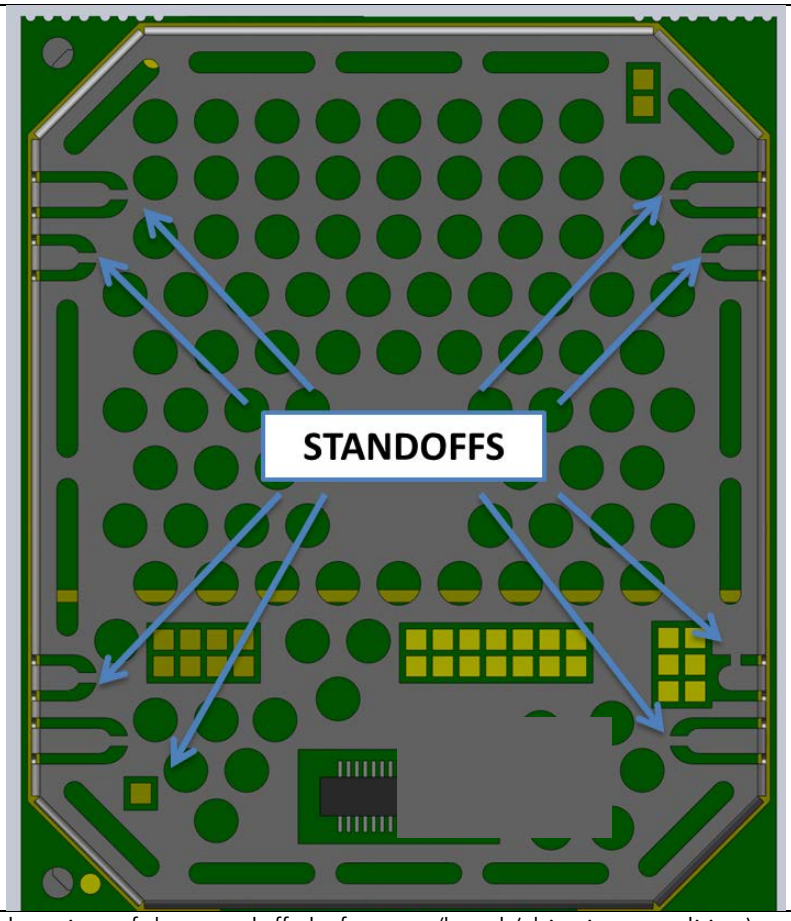

The location of the standoffs before cut/bend (shipping condition).

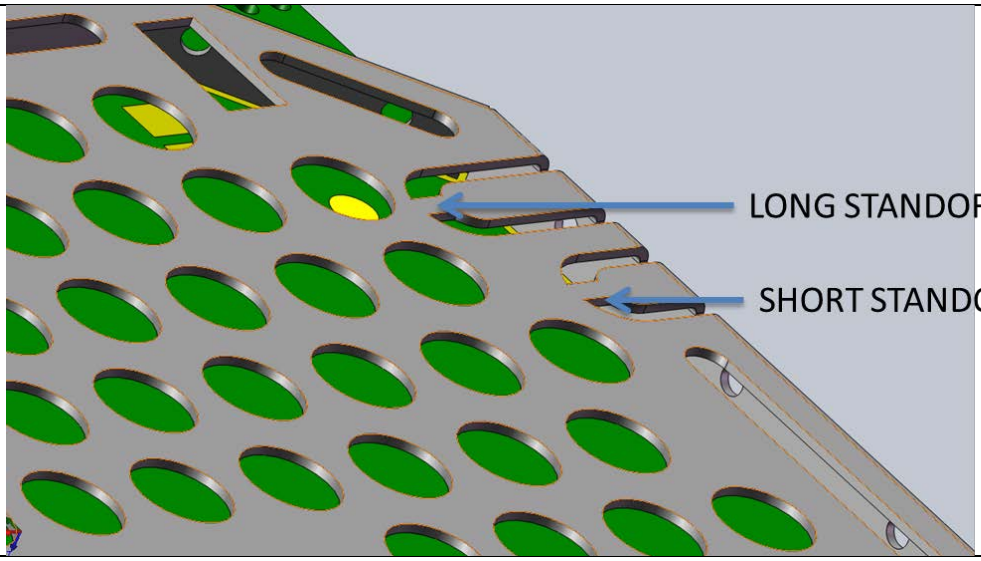

Picture. The two different standoffs in a close-up.

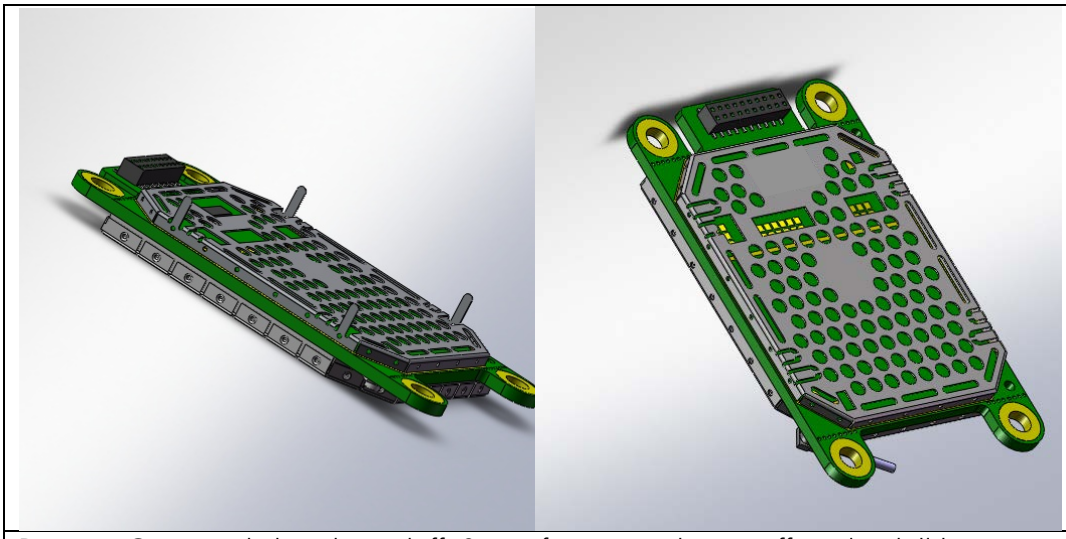

Picture . Open and closed standoff. Screw fixings can be cut off on the drill line.

2.3 Soldering / host board instructions for mounting pegs

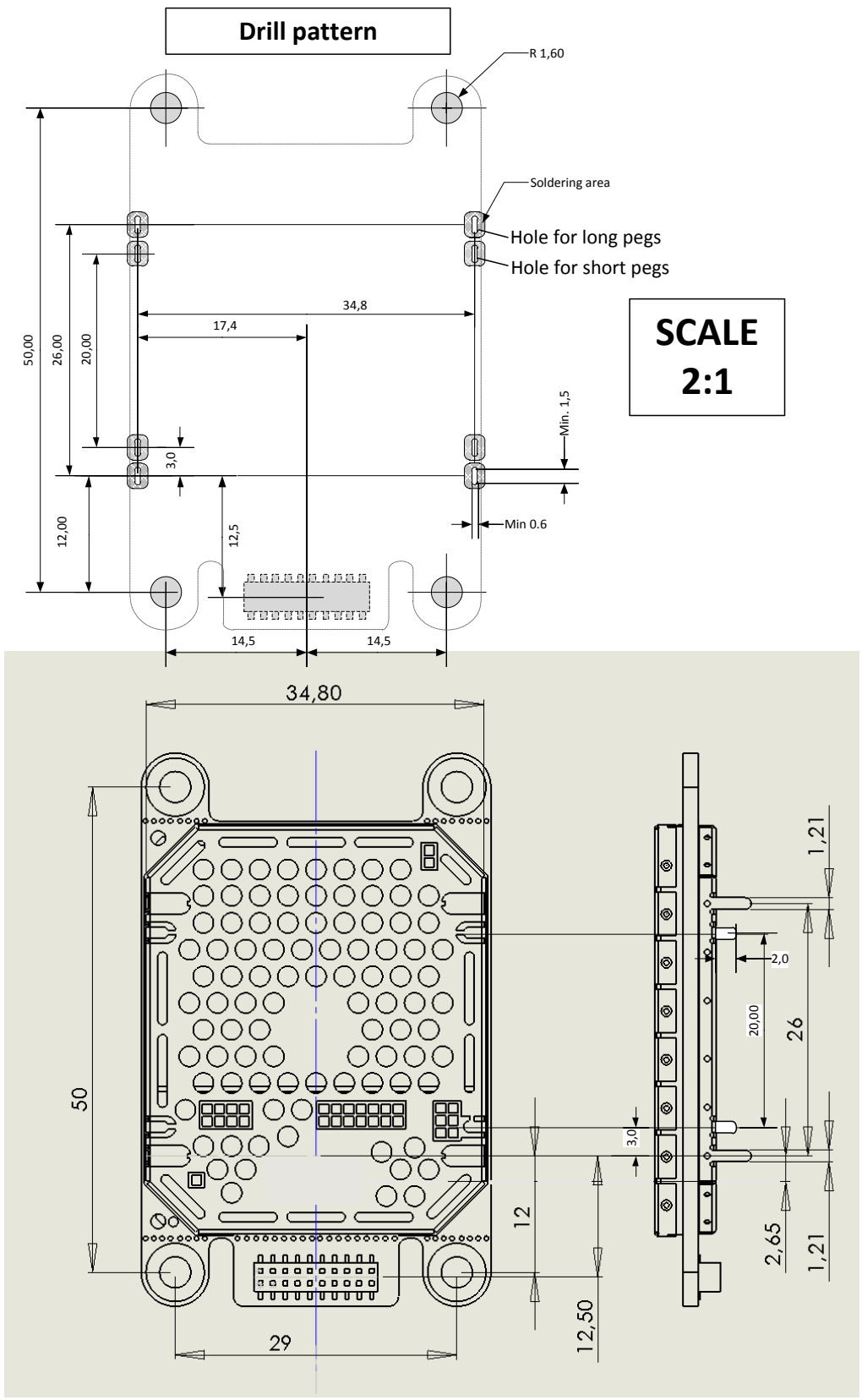

Picture. Host board solders instructions.

3 CHANGING PARAMETERS USING SL-COMMANDS

The controlling terminal device can change the configuration settings of the module. This is accomplished with the help of SL-commands, which can be used during data transfer. SL-commands can be used to change e.g. the frequency or addresses. It is also possible to ask the radio modem to show current settings which are in use. The terminal device is either a PC or a programmable logic (PLC) together with suitable (terminal) program.

3.1 SL-Commands

An SL-command is a continuous string of characters, which is separated from other data by pauses which are equal or greater than time defined by Pause length parameter (default=3 characters) in the set-up. No extra characters are allowed at the end of an SL-command. Serial interface settings are the same as in data transfer. SL-command is properly recognised also in the case when the command string is terminated in <CR> (=ASCII character no. 13, Carriage Return, 0x0d) or <CR><LF> (<LF> = ASCII char. no. 10, Line Feed, 0x0a). If multiple SL commands are sent to the module, the next command can be given after receiving the response ("Ok" or "Error") of the proceeding command. In addition, it is recommended to implement a timeout to the terminal software for recovering the case when no response is received from the radio modem.

The module will acknowledge all commands by returning an "OK" (command carried out or accepted) or the requested value, or an "ERROR" (command not carried out or interpreted as erroneous) message.

The SL-commands are listed in separate excel-document.

3.2 Operating modes

The modem has the following modes of operation:

Mode	Function	Description
Ready to receive from RF	Search for sync	Module is searching for the start of a radio transmission from the RF signal.
	Receive data	The module has found a valid radio transmission and is receiving data.
Safe mode		Mode is entered when a fault has been detected and the device has been Rebooted. In safe mode fault codes can be read from the modem.
Powersave	Sleep1	Will turn the modem into a state where it will hold parts of the radio on, wakeup will take <5ms
Powersave	Sleep2	Will turn off the entire radio section and put CPU into sleep mode. Consumption is lower, but wakeup time is approx. <40ms.

PS-mode	Receiver ON/OFF	1. When started, 7 messages are analyzed and the average is calculated. The ON/OFF interval (plus some margin) is selected according to the shortest and modem is switched OFF. Modem will be switched on 60ms prior to next message. 2. The interval is measured all the time from every message. 3. If the interval is shorter than 10ms from average, additional 1ms is added to the average value. 4. If the interval change is more than 100ms, calculation starts from the beginning (from point 1). 5. If the calculated "cap" for sleeping is less than 100ms, no PS is used. 6. New calculation will also be done every 100 message intervals – this is for safety reasons. 7. When the PS-time is used, it is so flexible that the interval can change +/- 40ms, without losing any messages.

3.3 Safe mode

When a fault has been detected by the Firmware, the module is set to Safe mode. In this mode the module toggle's the Stat Pin in 250ms interval indicating an Error and reboots the device after 5s. When connecting to the device with SATEL Configuration Manager the Error code is shown in pop up box. If the device does not recover after multiply reboots, please contact SATEL.

3.4 Power up / power down scenarios

The modem can be set in five (5) states, "ON", "OFF", "sleep1"," sleep2", "PS-Mode"
When power is applied to the module, the module can be switched ON/OFF using the ENA_MODEM pin to >1.2V.

3.5 Turn ON using command

When being in either off or sleep mode, the modem will be automatically wake up after the CPU senses a state change in the TD1 pin. The first data byte is lost because the CPU UART is shut off, and is not able to read data.
To turn the modem ON from modes sleep1 or sleep2

1) Issue a state change to DT1 (toggle pin (minimum pulse duration time 10 μs) or issue a byte on the UART (for example 0x00))
2) Wait for "OK" -response from the module
3) Start communicating normally

Modem will remain powered ON until a new sleep command is issued.

3.6 Turn OFF using command

Two control commands are available for putting the device into different states of power save mode. (see SL-list).

3.7 Turn OFF using pin

The modem can be shut down by driving ENA_IO line to <0.2V.
In the "OFF" state current consumption is only that of leakage current from a LDO (xx uA).
In this state all non parts off the module are powered down and all settings / state information that are not stored in NVM is reset.

3.8 Restart

After startup the module can be restarted by issuing a SL command, upon which the modem will shut down all circuitry, and Reboot the CPU. (see SL-list)

3.9 Startup sequence

The following diagram will describe the startup sequence.

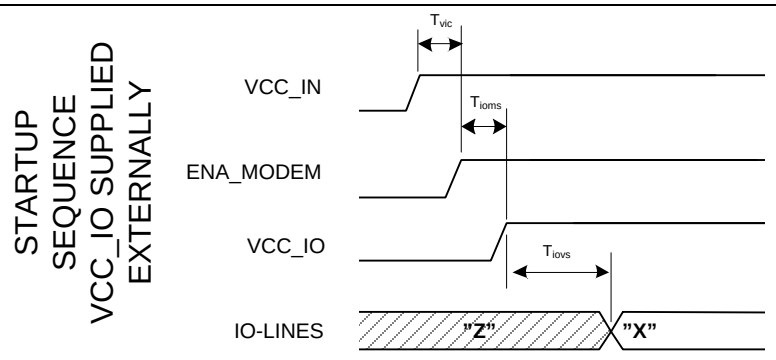

Figure. Startup sequence with VCC_IO supplied externally.

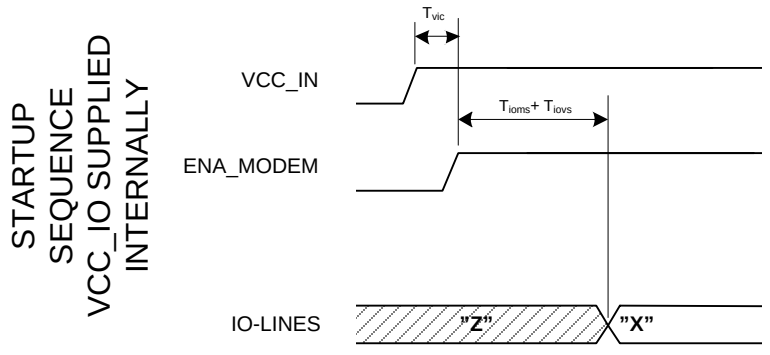

Figure. Startup sequence with VCC_IO supplied internally

3.10 Shutdown sequence

The following diagram will describe the shutdown sequence.

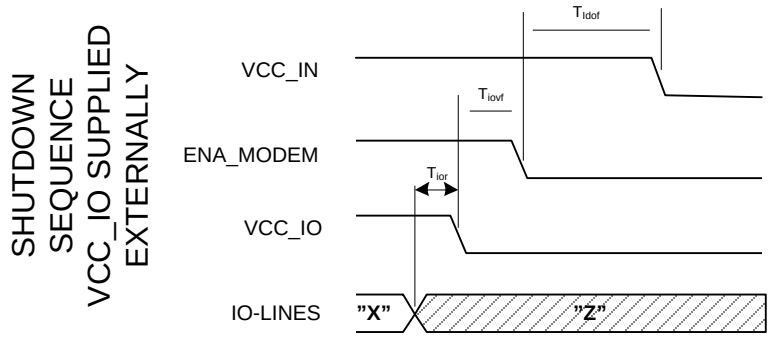

Figure. Shutdown sequence with VCC_IO supplied externally.

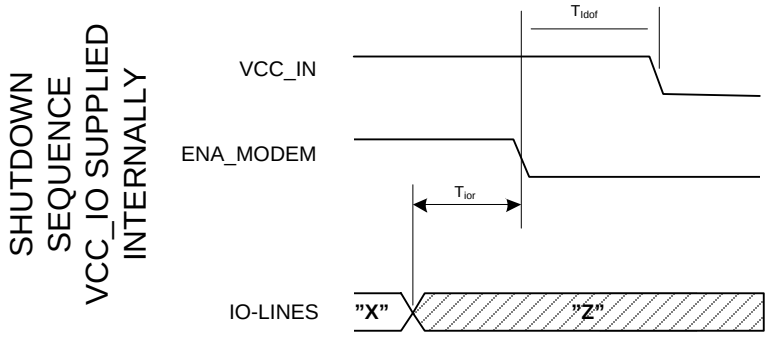

Figure. Shutdown sequence with VCC_IO supplied internally.

3.11 Time parameters for start-up and shutdown sequences

Parameter		Min time	Recom. Time (*	Explanation
T_{vic}	Input capacitor charge time	0	>50µs	When voltage is applied to VCC_IN the filter capacitors inside the module are charged, creating a small current surge. If the feeding power supply is not very strong it is recommended to wait this time before rising ENA_MODEM to minimize current surge.
T_{ioms}	Io module start time	0	>50µs	ENA_MODEM rise enable the LDOs feeding the FPGA and CPU inside the module. Waiting for the internal parts of the module start before applying external VCC_IO is good design practice to avoid latchup problems.
T_{iovs}	Io voltage startup time	0	>50µs	it is considered good design practice to KEEP all IO signals (except ENA_MODEM) low or floating until the internal parts of the module have power and the IO voltage is stable.
T_{ior}	IO drive fall time	0	>10 µs	It is considered good design practice to set all IO signals (except ENA_MODEM) low or floating before starting to shut shutdown the modem. This way any latchup/brownout problems can be avoided.
T_{iovf}	IO voltage discharge time	0	>TBD	When using external IO voltage it is considered good design practice to shut off this voltage and to let it drop before shutting down the module.
T_{ldof}	LDO discharge time	0	>TBD	To avoid any possibility of reverse biasing of regulators inside the modem, it is considered good design practice to use ENA_MODEM to shut down the regulators before deactivating VCC_IN.

Table. Startup and shutdown sequence parameters.

*) Recommendations:
The modem is designed and tested for the minimum times mentioned in the table. The recommendations are there for those who want to do the very best possible startup and startup sequences.

3.12 Stat pin

The STAT pin indicates the status of the device. It can be used to drive a LED using a series resistor. STAT pin drive capability is 10mA (loads the VCC_IO if provided externally).
The STAT pin has the following behavior.

Blink cycle	Mode
"1" - statically	module is operational "searching for a new frame"
"0" for the endurance of the received frame.	"0" when module is receiving data from air interface. "1" when receiving. In practical cases will toggle at the frequency of the data packets on the air interface.
"0" statically	Modem is in sleep1 or sleep2 mode
pin is toggled in 1s interval	Modem is in programming mode
Pin is toggled in 250ms interval	Modem has detected a fault, fault codes can be read in the programming mode.

Table. Modes of STAT pin.

3.13 Service pin

The SERVICE pin is used to set the UART1 into a known state. Pulling this pin low will activate the service mode and set the UART1 into 115200, n, 8, 1. This is intended for service access of the module, to have a known serial port setting in order to access the module settings.
The pin does not affect any permanent settings, nor does it change the mode of the module. Releasing/ driving the pin high will return serial port 1 into the configured state.

3.14 Antenna interface

The antenna interface is a 50 Ω coaxial connector. Matching networks are not included on the module and should be placed in the host application if the antenna is not 50 Ω. The HIROSE U.FL compatible connector is located on the TOP side of the board.

4 TECHNICAL SPECIFICATIONS

SATELLINE-M3-R3 complies with the following international standards:
EN 300 113-1 V.1.6.2 (RF)
EN 301 489 (EMC-requirements)
EN 60950 (Safety Standard)
FCC CFR47 PART 15

	RECEIVER	Note!
Frequency Range	403...473 MHz	
Frequency Control	Synthesized 6.25kHz tuning resolution	
Channel Bandwidth	12.5kHz and 25kHz, software derived	
Tuning range	70 MHz	
Sensitivity	- 114 dBm @ 12.5kHz -111 dBm @ 25 kHz (BER < 10 E-3)	FEC On
Co-channel Rejection	> -12 dB	FEC On
Adjacent Channel Selectivity	> 45 dB @12.5 kHz > 52 dB @ 25 kHz	FEC On
Intermodulation Attenuation	> 60 dB	FEC On
Blocking	> 86 dB	FEC On
Spurious Rejection	> 60 dB	FEC On
Power Consumption, typical	570mW	RX-mode
Power Consumption	SLEEP 1: 240mW SLEEP 2: 150mW	Sleep mode

	DATA MODEM	
Timing	(UART)	
Electrical Interface	CMOS Inputs and outputs referred to IO voltage provided by user (1.8V….3.3V) (RTS, CTS, RX, TX, +VCC, GND)	
Interface Connector	Samtec 20-pin through hole, CLP-110-02-L-D-K-TR	
Data speed of I/O-interface	1200 – 115200 bps	
Data speed of Radio Interface	19200 bps (25 kHz channel) / 9600 bps (12.5 kHz / 20 kHz channel)	
Data Formats	Asynchronous data	
Modulation	4FSK, GMSK	

	GENERAL	
Operating Voltage	4.0 VDC	
Temperature Range	-25°C...+55°C.	Type approval condition
Temperature Ranges	-30 °C ... +70 °C	Functional
	-25 °C ... +55 °C	Complies with standards
	-40°C … +85°C	Storage
Vibration	ISO 9022-36-08 (sinus/ 10Hz-500Hz/ +/-0.35mm/5g/ 1 Oct./min/ 10 cycles/ each axis) OPERATING.	Tested as a standalone unit (mounted PCB), mount on a test fixture simulating a typical DTE.
Antenna Connector	50 ohm , HIROSE compatible U.FL	
Construction	PCB with sheet metal EMI shields	
Size L x W x T	56 x 36 x 6 mm	
Weight	18g	

4.1 Absolute maximum ratings (*

Absolute maximum ratings for voltages on different pins are listed in the following table. Exceeding these values will cause permanent damage to the module.

Parameter	Min	Max
Voltage at VCC_IN	-0.3 V	+5 (TBD) V
Voltage at ENA_MODEM	-0.3 V	+6 V
Voltage at VCC_IO	-0.5 V	3.75 V
Voltage at digital inputs (except ENA_MODEM)	-0.5 V	3.75 V
Voltage at digital outputs (when no power is applied to unit)	-0.5 V	3.75 V
Antenna port power	n.a.	+14dBm
Antenna port DC voltage	-10V	+10V

Table. Absolute maximum ratings of module.

(* All voltages are referenced to GND

4.2 DC electrical specifications

Over recommended operating conditions

Parameter	Condition	Min	Max	Units
VCC_IN	4.0V is considered nominal	Nominal -5%	Nominal +5%	V
ENA_modem, Vlow		0.9	VCC_IN	V
ENA_modem, Vhigh		0	0.4	V
Logic input, Vlow	1.8V<VCC_IO<3.3V	-0.3	<0.35*VCC_IO	V
Logic input, Vhigh	1.8V<VCC_IO<3.3V	0.65*VCC_IO	3.6	V
Logic output, Vlow	1.8V<VCC_IO<3.3V	-	0.4	V
Logic output, Vhigh	1.8V<VCC_IO<3.3V	-	VCC_IO-0.4	V
Logic output, max current	All logic output except STAT pin.	-	4	mA
Logic output, max current, STAT pin		-	12	mA

NOTE: When VCC_IO is supplied internally, VCC_IO is 3.3V.

5 DEFAULT DELIVERY VALUES

DEFAULT VALUES OF THE ADJUSTABLE SETTINGS (the user can change these settings later on)		
Setting	Default value	Range
Radio frequency		
Operating RX frequency	438.000 MHz	Range: 403-473 MHz
Reference Frequency	438.000 MHz	Range: 403-473 MHz
Channel Spacing	25 kHz	Range:12.5kHz, 20kHz, or 25 kHz
Radio settings		
Radio Compatibility	SATEL 3AS	SATEL 3AS PacCrest-4FSK PacCrest-GMSK TrimTalk 450s(P) TrimTalk 450s(T) PacCrest-FST
Addressing		
RX Address	OFF	ON/OFF
Serial port		
Status	ON	ON
Data speed	115200bps	
Data bits	8	7, 8
Parity bits	None	None, Even, Odd.
Stop bits	1	1
Handshaking		Handshaking lines apply to the DATA-port.
CTS	Clear to send	Clear to send, TX buffer state
RTS	Ignored	Ignored, Flow Control, Reception Control.
Additional setup		
Error correction	OFF	ON/OFF
Error check	OFF	ON/OFF
SL-commands	ON	ON/OFF
FullCR16 Check	OFF	ON/OFF

6 CONSIDERATIONS

6.1 Emi Interferers

The module is designed to be mounted inside a host device. The module is designed to withstand EMI even beyond type approval requirements. However, a small module which is integrated closely to modern high speed electronics is bound to receive some interference.

To make a working integration consider the following. EMI can enter the module in four ways:

1) Via the antenna (radiation from enclosure enters the antenna)
2) Radiated disturbances to the coaxial cable
3) Radiation from other electronics / cabling directly to the module
4) Conducting through the DTE interface (power, control and data lines).

Because the module is shielded and the DTE interface is filtered, the usually worst method of disturbance is via the antenna port, which is easily overlooked in design. Keep in mind that the radio module has a sensitivity of approx. -115 dBm (depends on mode of operation and speed etc.). While the module has an approx. 10 dB S/N requirement, this constitutes, that any signal entering the radio antenna on receive frequency on a level of < -125 dBm (-115dBm-10dB), causes desensitization of the radio on that particular channel.
Example:
An interferer has a level of -100dBm on the frequency 421 MHz The radio will show an approximate sensitivity of -90dB (-100dBm+S/N requirement 10 dB) on 421 MHz

Now consider that generic EMC requirements usually have pass/fail criteria of -57dBm (if normalized to the surface of the device). So there is almost a 70dB gap between generic EMC requirements and co-existence requirements between a high sensitivity narrowband radios.

To avoid problems of co-existence a good design should apply:

1) Emi shielding in enclosure – ambient air interface
2) careful layout
3) shielding of all digital high speed parts and cables
4) Have a clocking plan to avoid clock frequencies causing harmonics on the UHF band of interest.

Number one is to recognize this challenge and act upon it.
SATEL R&D can help in this by participating in design review of the host device, aiming to catch problems early in the design phase.

6.2 Electrostatic discharge

As the module is intended to be embedded in a host application, in a typical use case, the antenna port is the only port of the module directly interface with a surface or contact area subjected to Electrostatic Discharge (ESD).
Thus, the antenna port is the only interface with high level ESD protection. The DTE port also features ESD protection diodes, but is not designed to withstand similar performance as expected from standalone units with enclosures.
Consequently, the module should be subject to ESD handling precautions that typically apply to ESD sensitive components. Proper ESD handling and packaging procedures must be applied throughout the processing, handling and operation of any application that incorporates this module.

The module fulfills the ESD values listed in the following table.

Specification / Requirement	Contact discharge	Air discharge
EN 61000-4-2		
Antenna interface	TBD, target =±8kV	>±8kV
DTE interface	TBD, target =±1kV	>±8kV
JEDEC JESD22-A114D (Human Body Model, Test conditions: 1,5kΩ, 100pF)		
Module surface	±1kV	n.a.

Table. ESD ratings. At the time of writing, these are test goals, not yet tested.

6.3 Using the device in unmanned high reliability applications

The module features software and hardware watchdogs which are incorporated inside the CPU. While we believe that this is a reliable method of keeping the module in operational condition, there are parts of the module that can't be monitored for proper operation to 100%. For example the modem chip has a firmware that resides in the chips RAM. The firmware can't be read back or reloaded, without interrupting reception. Hence the module can't reload this automatically by itself without causing breaks in communication.
To avoid the module from ending up in a state where for example the modem chip firmware is corrupted for example by ionizing radiation, it is recommended that the controlling system implements some form of watchdog function for the module.
This can be done for example if the system knows that data should be received every second, and no data has been received for a minute – then do a module restart using the ENA_MODEM pin or by issuing a restart command, or a cold boot by toggling VCC_IN low and high again.